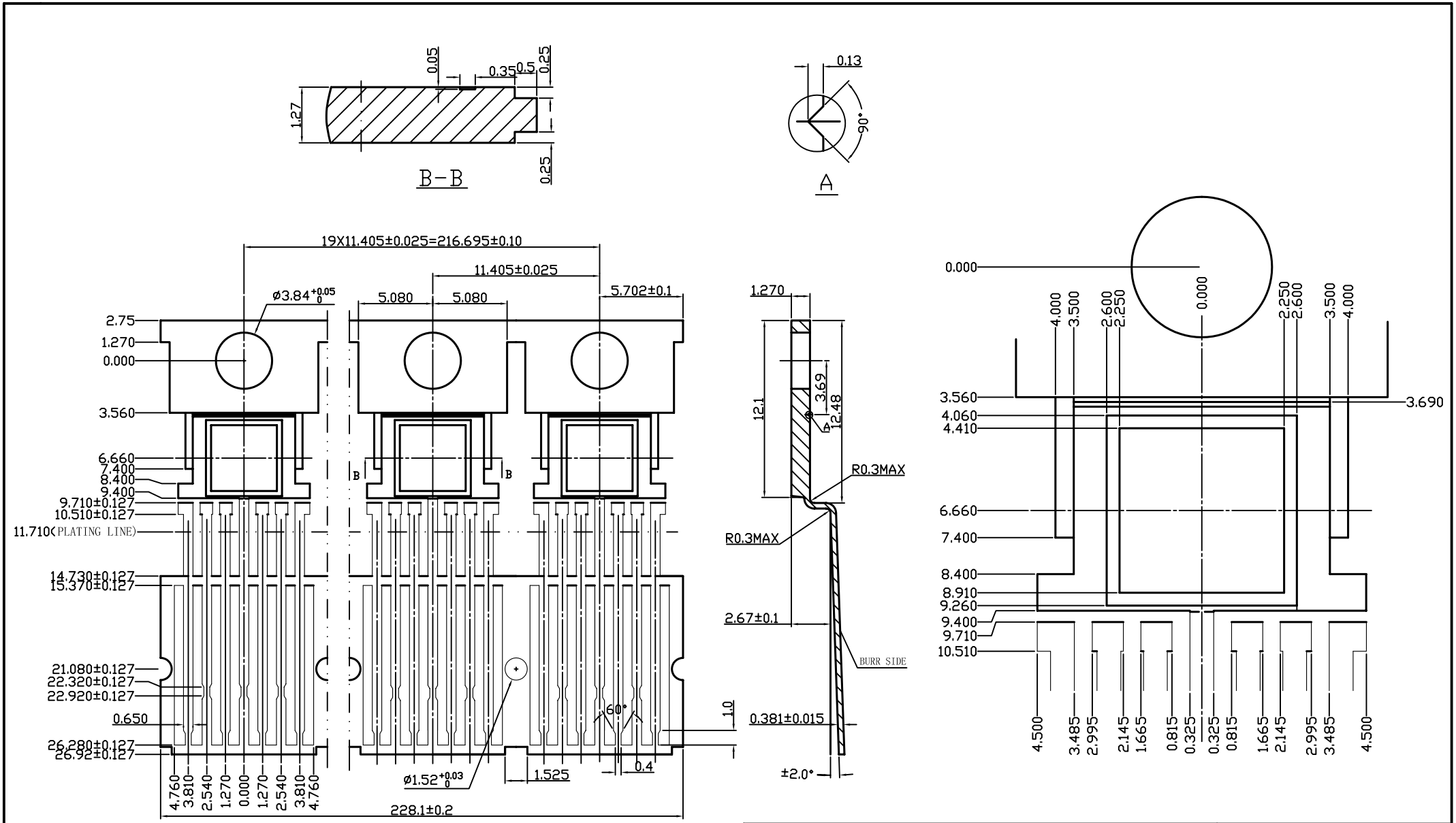
B-B
A
19X11.405±0.025=216.695±0.10
11.405±0.025
5.080
5.080
5.702±0.1
ø3.84 +0.05 0
2.75
1.270
0.000
3.560
6.660
7.400
8.400
9.400
9.710±0.127
10.510±0.127
11.710(PLATING LINE)
14.730±0.127
15.370±0.127
21.080±0.127
22.320±0.127
22.920±0.127
0.650
26.280±0.127
26.92±0.127
4.760
3.810
2.540
1.270
0.000
1.270
2.540
3.810
4.760
ø1.52 +0.03 0
1.525
0.4
60°
1.0
228.1±0.2
0.05
0.35
0.5
0.25
1.27
0.13
90°
1.270
12.1
3.69
12.48
R0.3MAX
R0.3MAX
2.67±0.1
BURR SIDE
0.381±0.015
±2.0°
0.000
4.000
3.500
2.600
2.250
0.000
2.250
2.600
3.500
4.000
3.560
4.060
4.410
3.690
6.660
7.400
8.400
8.910
9.260
9.400
9.710
10.510
4.500
3.485
2.995
2.145
1.665
0.815
0.325
0.325
0.815
1.665
2.145
2.995
3.485
4.500
A4
C1220/KFC
OR EQUIVALENT